The International Journal of Engineering and Science (IJES)
|| Volume || 15 || Issue 11 || November || Pages || PP 64-71 || 2026 ||
ISSN (e): 2319-1813 ISSN (p): 2319 – 1805

Bold Determination of parameters through laboratory tests on three-phase asynchronous machines

[1]Mercedes Lázaro-Gonzaga, [2]Manuel García-López
[1,2]*Instituto Politécnico Nacional, ESIME Zacatenco, Ciudad de México, México*
Corresponding Author: Mercedes Lázaro-Gonzaga

----------ABSTRACT----------
This paper presents two procedures for obtaining the electrical parameters of three-phase squirrel-cage rotor asynchronous machines, using the exact model of the induction machine. The first procedure uses the equations from IEEE Std. 112. The second procedure shows the method used in reference [8], based on obtaining data from laboratory tests and comparing them using an alternative graphical analysis. Both procedures were performed with a 1 HP three-phase squirrel-cage rotor induction machine with a NEMA B design.

KEYWORDS;-*Induction machine, parameter determination, vacuum test, locked rotor test, exact model of the induction machine*

Date of Submission: 11-11-2026 Date of acceptance: 23-11-2026

I. INTRODUCTION

Asynchronous machines, better known as induction machines, are so named because they exhibit a difference in rotor speed compared to the frequency of the stator connected to the system. They also have the characteristic of inducing currents from the stator to the rotor, since there is no physical connection between them. This mode of operation is called an electromagnetic induction machine [1].

Currently, squirrel-cage asynchronous machines remain among the best options when purchasing them, as they can be used for various purposes, as indicated by the NEMA classification [2], based on their torque-speed curve. They are used in industries and even as part of more complex systems such as wind turbines, among many others.

One of the key distinguishing parameters is derived from this NEMA classification, which is linked to the intended application of the machine. This classification is shown below:

Design A: Considered for high resistance and low reactance at startup, speed regulation is quite good, and its starting current is up to 5 to 7 times the nominal current.

Design B: This classification typically includes squirrel-cage rotor motors, which have lower starting current and low slip than the previous design.

Design C: This design is used when high starting torque at low currents is required. It offers greater acceleration due to the high starting torque, but tends to overheat under frequent starts or overloads.

Design D: This design is used when high starting torque at low currents is required. It exhibits high slip, and because it is used to move heavy loads or perform demanding tasks, it operates at low speeds. [2]

II. METHODOLOGY

Exact model of induction machine

The exact model for obtaining the parameters of an asynchronous machine is very similar to that of a transformer, with the difference that in an asynchronous machine the terminals on the secondary side are short-circuited, while in a transformer the load is connected to the terminals on the secondary side. See Fig. 1

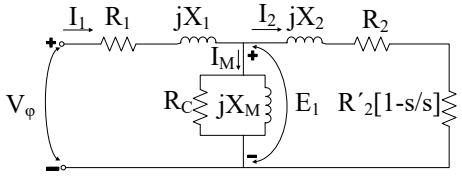

Fig. 1 Exact model of the induction machine. [3]

The symbols used are

E_1, Induced voltage in the primary winding (volts).
I_1, Stator current (amperes).
I_2, Rotor current (amperes).
I_M, Magnetizing current (amperes).
$R_1 = R_S$, Stator resistance (ohms).
$R_2 = R_R$, Rotor resistance (ohms).
R_C, Magnetizing resistance (ohms).
$X_1 = X_S$, Stator reactance (ohms).
$X_2 = X_R$, Rotor reactance (ohms).
X_M, Magnetizing reactance (ohms).
$V\varphi$, Supply voltage (volts).

There is another model for representing the squirrel-cage induction machine called the "approximate model". The difference between using the exact model and the approximate model lies in the fact that the approximate model is considered acceptable for use in motors larger than 10kW because the appreciable no-load current has values between 20 % and 50% of the nominal current due to the air gap of the induction machine. For all other cases, the circuit can be solved in a traditional way to obtain the parameters of the exact model. [3]

Parameterization based on laboratory tests.

a. Analytical Case

The tests performed to obtain the electrical parameters of the squirrel-cage induction motor were: ohmic resistance test, no-load test, and locked-rotor test. These tests were conducted using an experimental power system simulator located at the ESIME-Zacatenco facilities, within the Heavy Equipment II laboratories of the Electrical Engineering department. The tests were performed on a 1 HP motor, NEMA B design, and were based on IEEE Std. 112.In the ohmic resistance test, the R_1 values are obtained using a Wheatstone-Kelvin bridge. See Fig. 2.

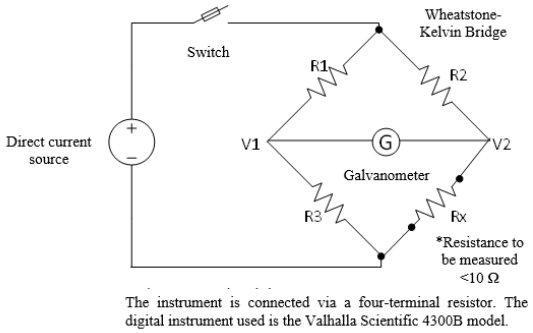

Fig. 2 Electrical connection for DC testing with Wheatstone-Kelvin bridge. [4]

The results of the measurements are expressed in Table 1, as well as the averages of these measurements.

Procedure (Wheatstone-Kelvin Bridge)				
Phase	**R [Ω]**	**E [mV]**	**I [mA]**	**T [°C]**
A	2.982	200	10	18
B	2.921	200	10	18
C	2.963	200	10	18

Average value	2.955	200	10	18

Table 1. Ohmic resistance test data.

For the no-load test, the X_M values are obtained from the parallel branch of the exact model. Additionally, using the voltage, current, and power values, the copper and rotational losses are calculated, allowing R_C to be obtained.For the locked-rotor test, the X_1, X_2, and R_2 values are obtained, and it is also possible to determine X_M. The connection diagram for both the no-load and locked-rotor tests is the same, except that the locked-rotor test includes the dotted section (see Figure 3).

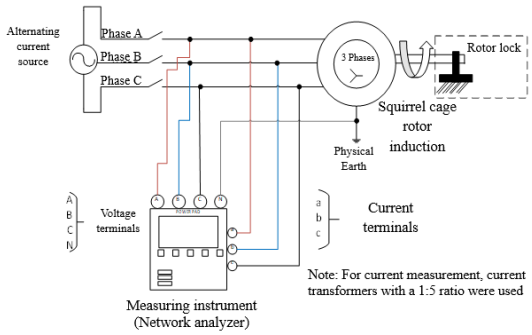

Fig. 3 Connection diagram for vacuum and locked rotor test.

The results obtained from the vacuum and locked rotor test are shown in Tables 2 and 3 respectively.

Phases	**A**	**B**	**C**	**Average of averages**
AverageI[A]	1.090	1.072	1.154	1.106
AverageE[V]	121.34	121.61	121.2	121.387
AverageP[W]	57.5			
F.P	0.2861			

Table 2. Vacuum test data.

Data	**E [V]**	**I [A]**	**P[W]**	**F.P**
PhaseA	29.7	3.4	52.3	0.515
PhaseB	30.3	3.6	64.3	0.585
PhaseC	30	3.5	60.7	0.582
AverageI[A]	3.5			
AverageP[W]	59.1			
AverageF. P.	0.561			

Table 3. Locked rotor test data.

Once the test results are obtained, the equations for determining the machine parameters can be seen in Table 4. [1, 4, 5, 6, 7, 8, 9].

Equations	**Results of the analytical method**
$R_S = R_t\left(\frac{234.5 + T2}{234.5 + T1}\right)$	R_S = 3.8561 Ω
See table 3	I_{RB}=3.5 A
See table 3	V_{RB}=30 V
See table 3	$P_{RB\ 1\phi}$=59.1W
$X_{RB} = X_S + X_M = \sqrt{Z_{RB}^2 - R_{RB}^2}$	X_{RB} = 7.0847 Ω
$Z_{RB} = \frac{V_{RB}}{I_{RB}}$	Z_{RB} = 8.5714 Ω
$X_S = 0.4 * X_{RB}$	X_S = 2.8338 Ω

$X_R = 0.6 * X_{RB}$	X_R = 4.2508 Ω
$X_M = X_V - X_S$	X_M = 96.3444 Ω
$R_R = (R_{RB} - R_S)\left(\frac{(X_R + X_M)}{(X_M)}\right)^2$	R_R/s = 1.0555 Ω
$R_C = \frac{V_V^2}{P_{rot}}$	R_C = 339.9137 Ω
See table 2	I_V=1.106 A
See table 2	V_V=121.3879 V
See table 2	P_V=57.5 W
$R_V = \frac{P_V}{I_V^2}$	R_V = 47.0064 Ω
$Z_V = \frac{V_V}{I_V}$	Z_V = 109.7539 Ω
$X_V = X_S + X_M = \sqrt{Z_V^2 - R_V^2}$	X_V = 99.1782 Ω
$\cos(\theta_V) = \frac{P_V}{V_V I_V}$	Cos ($Ø_V$)=0.4282
$P_{CU} = 3 * I_V^2 * R_S$	P_{CU} = 14.1507W
$P_{rot} = P_V - P_{CU}$	P_{rot}= 43.3493 W
$R_{RB} = R_S + R_R' = \frac{P_{RB}}{I_{RB}^2}$	R_{RB}=4.8244 Ω

Table 4. Equations and results for the analytical case.

Figure 4 shows the data of the equivalent circuit of the machine with the values obtained.

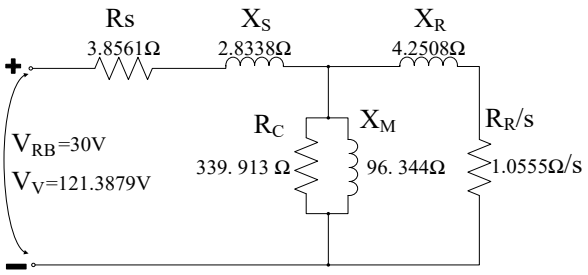

Fig. 4 Equivalent circuit of the asynchronous machine (analytical case).

a. Graphic Case.

This alternative method allows for the determination of parameters such as R_S, R_C, and X_M.The circuit shown in Figure 5 is used for the ohmic resistance test.

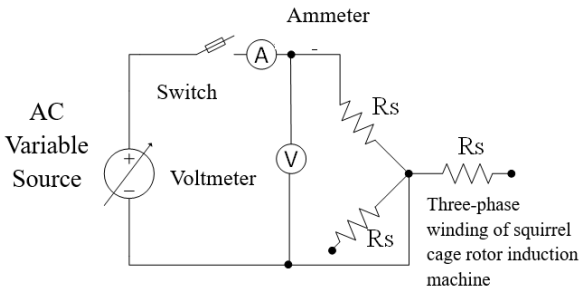

Fig. 5 Electrical circuit for DC ohmic resistance testing, with a variable power supply.

The measurements recorded during the test are shown in Table 5.

Data	Phase A		
	Measurement 1	**Measurement 2**	**Measurement 3**
E [V]	9.22	10.56	12.73
I [A]	3	3.40	4
R [Ω]	3.073	3.105	3.182
Average R [Ω]	3.12		
T [^{o}C]	18 °C	18 °C	18 °C

Table 5. Ohmic Resistance Test Data for the Graphical Method.

Using the voltage versus current values from Table 5, the equation of the line with slope is obtained, and the inverse of the slope will be the expected value of R_S. See Fig. 6.

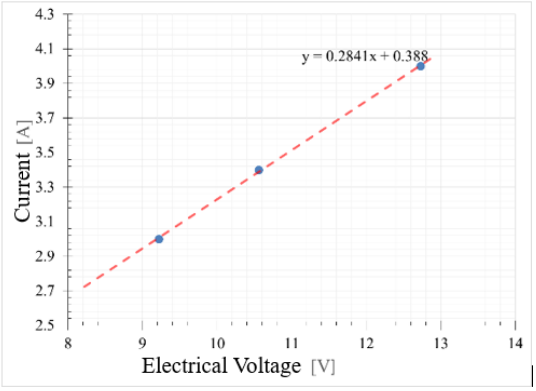

Fig. 6 Ohmic resistance graph.

The results obtained for the vacuum test are shown in Table 6.

E [V²]	**Current [A]**	**Electric Power [W]**	**P mag. + P fricción [W]**
48414.67	1.87	130.70	90.39
41412.25	1.73	110.50	75.74
31802.78	1.50	84.80	58.77
25953.21	1.37	70.80	49.19
18668.67	1.13	54.30	39.44
14034.35	1.00	44.80	33.23
10033.36	0.83	37.30	29.27
6729.47	0.73	30.80	24.58
4091.73	0.60	26.00	21.84
2128.28	0.57	21.80	18.09
620.01	0.83	20.70	12.67
Average value	1.11	57.50	

Table 6. Vacuum Test Data, Graphical Method.

Magnetic power plus friction power is found using the following equation:

$$P_{mag.} + P_{fricción} = P_V - 3I_V^2 * R_S \qquad (1)$$

Using the power values, a linear extrapolation is performed to find the magnetization curve of the asynchronous machine. See Figure 7.

To obtain a better result, it is necessary to take readings greater than 10% of the nominal voltage, since the values disperse considerably. [8,9]

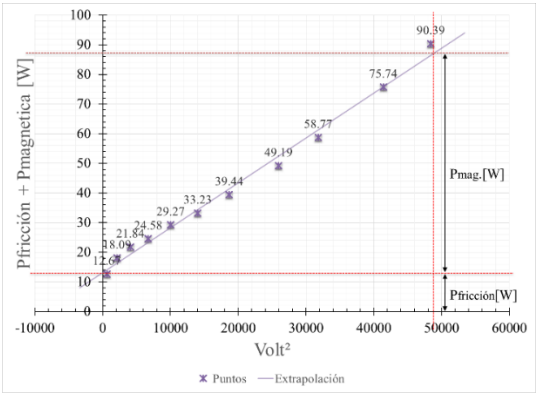

Fig. 7 Magnetization curve of the 1HP machine

The frictional power is found by drawing a line perpendicular to the y-axis where the voltage is zero, and the magnetic power is found by squaring the nominal voltage and drawing a line perpendicular to the x-axis. The point where this line intersects the extrapolation line represents magnetic power, and the sum of both is the total power.

Obtaining the test results, the equations for determining the machine parameters can be seen in Table 7. [6, 7,8, 9].

Equations	**Graphic method results**
$R_S = \frac{1}{m}$	R_S = 3.5198 Ω
See table 3	I_{RB}=3.5 A
See table 3	V_{RB}=30V
See table 3	$P_{RB\ 3Ø}$=177.3W
$X_{RB} = X_S + X_R$	X_{RB} = 7.074 Ω
$\lvert Z_{RB}\rvert = \frac{V_{RB}}{I_{RB}}$	Z_{RB} = 8.5714 Ω
$X_S = 0.4 * X_{RB}$	X_S = 2.8296 Ω
$X_R = 0.6 * X_{RB}$	X_R = 4.2444 Ω
$X_M = \frac{\frac{V_{nom.}}{\sqrt{3}}}{I_M}$	X_M = 68.325 Ω
$R_R = \frac{P_{3ØRB}}{3{I_V}^2} - R_S$	R_R/s = 0.9683 Ω
$R_C = \frac{\left(\frac{V_{nom.}}{\sqrt{3}}\right)^2}{\frac{P_{mag.}}{3}}$	R_C = 654.939 Ω
See table 6	I_V=1.11ª
See table 6	V_V=121.39V
See table 6	P_V=57.5W
See fig.7	$P_{fricción}$=13.1W
$P_{totales} = P_{mag.} + P_{fricción}$	$P_{totales}$=87W
Ver fig. 7	$P_{mag.}$=73.9W
$F.P. = \frac{P_{mag.}}{\sqrt{3}V_{nom}I_{nom}}$	F.P.=0.1037
$\theta = \cos^{-1}(F.P.)$	θ= 84.047

$I_{nom} \sin\theta$	$I_M = 1.859$ A

Table 7. Equations and results for the graphical case.

The results of the machine's equivalent circuit are shown in figure 8, the equivalent circuit of the machine.

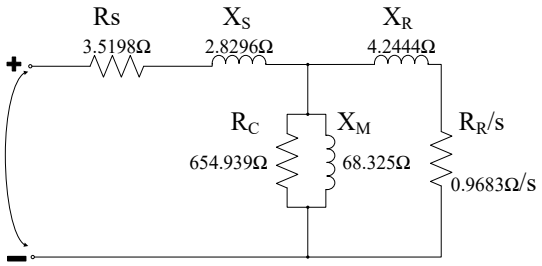

Fig. 8 Equivalent circuit of the asynchronous machine (graphic case).

III. ANALYSIS OF RESULTS

The analytical method yielded a greater number of data points regarding the internal conditions of the machine, and these results are even more accurate, as it is based on the IEEE 112 standard. This assumes that the interpretation of the standard is correct.

There is a variation between the results of both methods. This is due to the way the calculations were performed, since for the analytical method, the stator resistance is obtained using Ohm's law; while in the second method, voltage is plotted against current, thus obtaining a straight line by connecting the points. The reciprocal of the value of this line gives the value of the desired resistance; in both cases, a temperature correction is applied.

The calculations for magnetizing reactance in the first method are made using the difference between the no-load reactance and the stator reactance; for the graphical method, the reactance is calculated by dividing the nameplate voltage by the magnetizing current; this is the basis for the difference in the values in the equivalent circuit, which is shown in Table 7.

For magnetizing resistance, the first method shows a relationship with the square of the no-load test voltage divided by the rotational losses, while the second method calculates it by dividing the square of the machine's nameplate voltage by the magnetic losses.

It's worth mentioning that these variations for both X_M and R_C are negligible for certain types of studies, such as dynamic stability, since the eigenvalues and eigenvectors change very little. However, for machine design and modeling, any variation in any variable directly affects its construction and operation.

Another important point is the accuracy and precision of the measurements taken with the instruments. If there are too many variations in the readings, the resulting value will be unreliable. Therefore, it is recommended to use highly accurate and well-calibrated instruments, as all subsequent calculations depend on them.

IV. CONCLUSIONS

Properly documenting testing procedures and data is crucial, as it directly impacts the reliability of the results obtained from tests or other methods. Standards are fundamental to most processes, making it vital to know which standard will be used or standardized. Similarly, the interpretation of the standard will directly affect the final results, highlighting the importance of consulting multiple sources.

Due to the widespread use of induction machines in industry, it is important to know their internal state in order to make informed decisions about potential failures or determine necessary maintenance. Furthermore, as mentioned, characterizing the machine is beneficial for future studies such as short-circuit analysis, Thevenin equivalents, dynamic stability analysis, and many others. Therefore, finding a simple and reliable method for obtaining parameters based on parameterization is of great importance.

The final values were suitable for obtaining the induction machine parameters in a dynamic stability study, as the difference between them did not significantly affect the results. However, it could significantly impact the design and modeling of the induction machine; if so, this would require further attention in standards such as the IEC.

The limitations of the work lie in the precision and model of the measuring instruments used during the vacuum, ohmic resistance and locked rotor tests, since they are not new models and, being in constant use, need to be calibrated; the lack of information on the induction motor with respect to the manufacturer's data does not allow for another method for the characterization of the machine.

The contributions of this work are to provide a clear and simple procedure for determining the parameters of a squirrel-cage induction machine; and to ensure that this type of topic remains relevant in the field of electrical engineering. Finally, it offers a comparison of methods to verify the obtained values.

REFERENCE

[1]. T. Wildi. (2007). *Máquinas Eléctricas y Sistemas de Potencia.* México: PEARSON EDUCATION.

[2]. F. Mora, J. (2003). *Máquinas Eléctricas.* Madrid, España: Mc Graw Hill.

[3]. J. Chapman, S. (2012). *Máquinas Eléctricas.* México, D.F. Mc Graw Hill.

[4]. Ruiz, V. D. (1996*). Efecto de los modelos de motores de inducción en sistemas eléctricos de potencia*. Instituto Politécnico Nacional. SEPI – ESIME.

[5]. Santos, M. E. (1998). *Interacción del generador de inducción con un sistema eléctrico de potencia.* Instituto Politécnico Nacional. SEPI – ESIME.

[6]. Asiaín, O. T. I. (1991). *Utilización de las máquinas generalizadas en la determinación experimental de parámetros en máquinas síncronas y de inducción.* Instituto Politécnico Nacional. SEPI – ESIME.

[7]. Ríos, H. A. C. y Strauss, L. A.D. (2007). *Evaluación delcomportamiento de una máquina de inducción de rotor tipojaula de ardilla como generador para ser empleado en un sistema de conversión de energía del viento*. Universidad Nacional Experimental Politécnica de la Fuerza Armada Nacional UNEFA

[8]. Ríos, A. S., Terán, R. (2007). *Determinación experimental de los parámetros eléctricos de una máquina de inducción de 180 Watt*. Reporte de investigación 2007 – 10.

[9]. Rivera, S. C. A. (1989). *Modelos aproximados para motores de inducción en estudios de estabilidad transitoria en sistemas eléctricos de potencia.* Instituto Politécnico Nacional. SEPI-ESIME.